Herbert Wertheim College of Engineering
UNIVERSITY of FLORIDA

EIN 4360 Facilities Planning and Material Handling

Chapter 4: Personnel Requirements

Nicolas Grimaldi

E-mail: n.grimaldi@ufl.edu

Office: Weil 401A

POWERING THE NEW ENGINEER TO TRANSFORM THE FUTURE

Summary

- Plan personnel requirements into a facility, given the desires of management.
- Plan for employee and customer well-being in a facility
  - *Planning for employee parking, restrooms, food services, health services, barrier-free compliance, and office spaces*

Personal Requirements

The planning of personnel requirements includes planning for employee:

- Parking
- Locker Rooms
- Restrooms
- Food Services
- Drinking Fountains
- Health Services
- Etc.

Why is it important?

A happy worker is a productive worker!

Philosophies relating to personnel requirements might differ between companies:

- Firm is responsible for the employees from the moment they leave their home until they return
- Assigned parking spots based on merit; or first come, first serve
- During workweeks, employees will spend half their (waking) time in our facility
    - We need to ensure that they enjoy working here; but not all companies might necessarily care

The Employee-Facility Interface

An interface between an employee's work and non-work activity's must be provided

Interface functions as storage area for personnel property (e.g. automobiles, coats, lunches, medicine, daycare)

- *Especially if these are required for the employee to get to work or sustain themselves during the workday*

Parking

How do we plan a parking lot?

Steps:

1. Determine the **number** of automobiles to be parked by the **type** of automobile.
2. Determine the **space** required for each **type** of automobile.
3. Determine the **available space** for parking.
4. Determine the **alternative parking layouts** for alternative parking **patterns**.
5. **Select the layout** that best utilizes space and maximizes employee convenience.

Parking: Accessibility

Requirements for accessible spaces per total parking spaces

According to the Americans with Disabilities Act Accessibilities Guidelines (ADAAG 4.1.2)

Total Parking in Lot	Required Minimum Number of Accessible Spaces
1 to 25	1
26 to 50	2
51 to 75	3
76 to 100	4
101 to 150	5
151 to 200	6
201 to 300	7
301 to 400	8
401 to 500	9
501 to 1000	2 percent of total
1001 and over	20 plus 1 for each 100 over 1000

Parking

The size of a parking space for an automobile:

- Stall Width (**SW**) x Stall Depth (**SD**)
- Vary from [5.5(SW) x 12(SD)] feet to [9.5(SW) x 19(SD)] feet depending on the type of automobile and the clearance that will be provided

Net area – sum of all usable space
Gross area – sum of all the space (including unusable)

Parking

The total area for a parked automobile includes the size of the parking space, the parking angle, and aisle width.

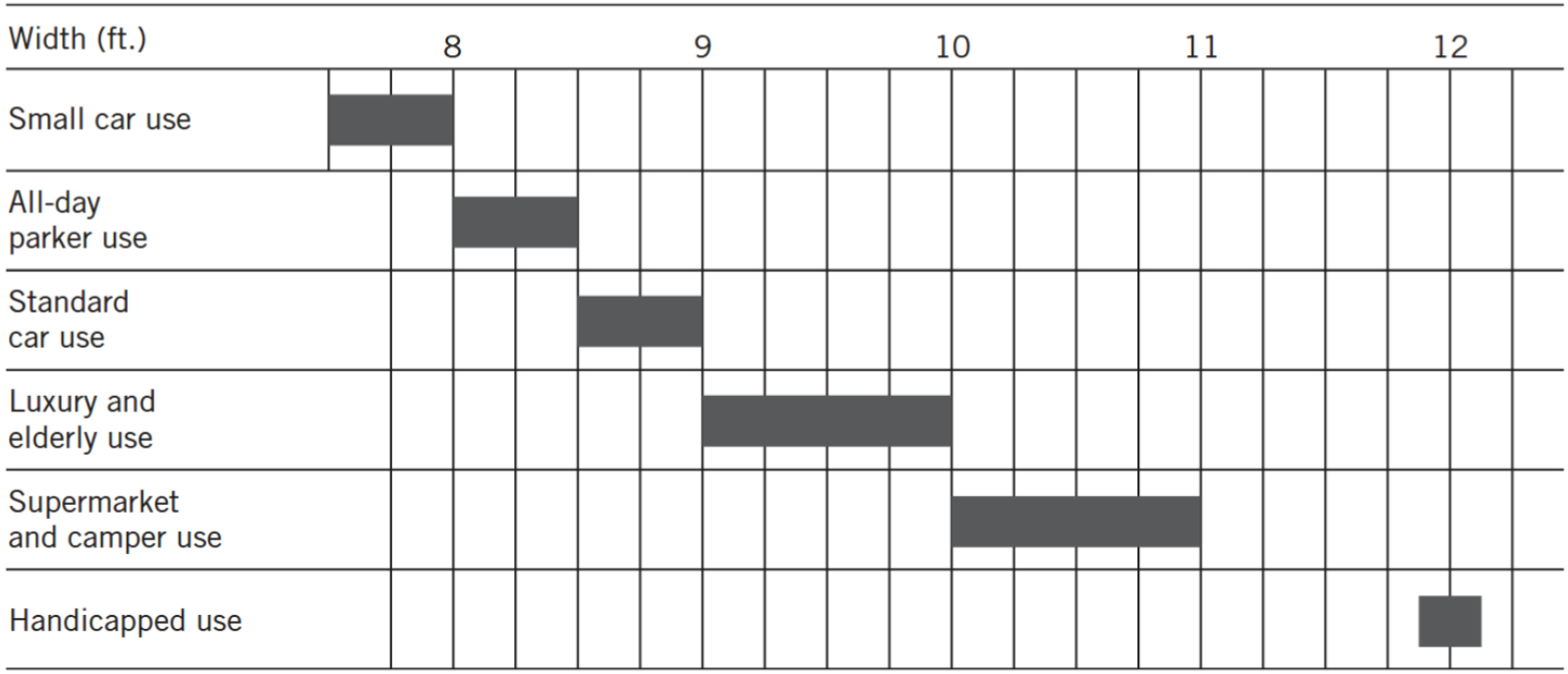

Parking

Factors to consider when determining specifications for a parking lot are:

- The percentage of compact automobiles, this is usually 33%
- Increasing the area provided for parking decreases the amount of time required to park and de-park
- Angular configurations allow for quicker turnover
- Perpendicular parking yields greater space utilization but requires wider aisles (roads)
- As the angle of a parking space increases, so does the required space allotted to aisles (roads)

Parking: Perpendicular

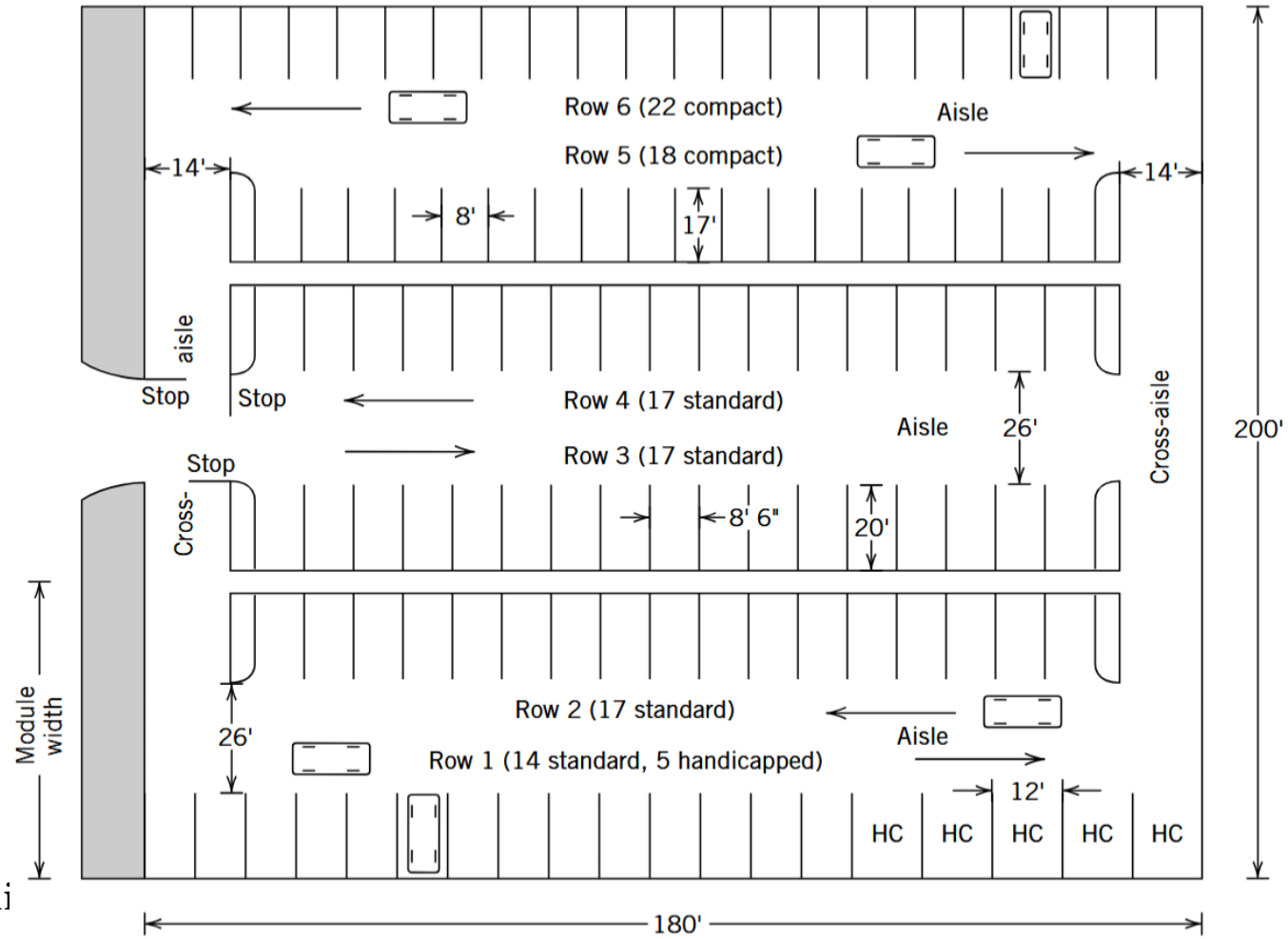

Parking: Angular

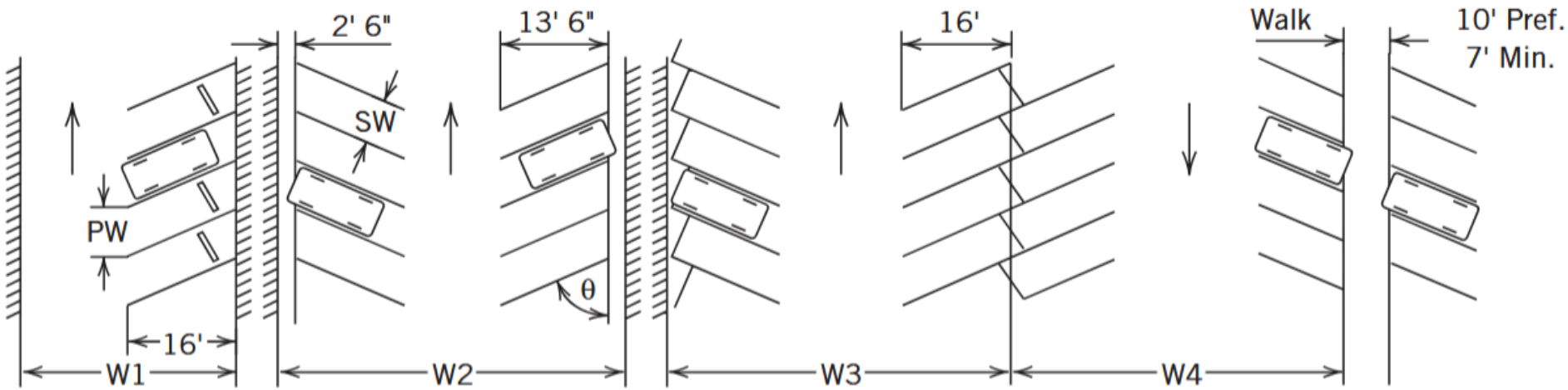

Single-loaded wall-to-wall (with bumpers)

Double-loaded wall-to-wall (with continuous concrete curb)

Double-loaded wall-to-℄ (with sawtooth concrete curb)

Double-loaded ℄-to-℄ (or ℄-to-walk edge)

$$PW = \frac{SW}{\text{Sine } \theta}$$

θ is the parking angle, PW is parking width, and SW is the stall width. At an angle of 90° (sine 90° = 1), PW = SW. As the parking angle decreases, PW increases accordingly.

Parking: Recommended Module Widths

			θ Angle of Park									
	SW	W	45°	50°	55°	60°	65°	70°	75°	80°	85°	90°
Group I: small cars	8′0″	1	25′9″	26′6″	27′2″	29′4″	31′9″	34′0″	36′2″	38′2″	40′0″	41′9″
		2	40′10″	42′0″	43′1″	45′8″	48′2″	50′6″	52′7″	54′4″	55′11″	57′2″
		3	38′9″	40′2″	41′5″	44′2″	47′0″	49′6″	51′10″	53′10″	55′8″	57′2″
		4	36′8″	38′3″	39′9″	42′9″	45′9″	48′6″	51′1″	53′4″	55′5″	57′2″
Group II: standard cars	8′6″	1	32′0″	32′11″	34′2″	36′2″	38′5″	41′0″	43′6″	45′6″	46′11″	48′0″
		2	49′10″	51′9″	53′10″	56′0″	58′4″	60′2″	62′0″	63′6″	64′9″	66′0″
		3	47′8″	49′4″	51′6″	54′0″	56′6″	59′0″	61′2″	63′0″	64′6″	66′0″
		4	45′3″	46′10″	49′0″	51′8″	54′6″	57′10″	60′0″	62′6″	64′3″	66′0″
	9′0″	1	32′0″	32′9″	34′0″	35′4″	37′6″	39′8″	42′0″	44′4″	46′2″	48′0″
		2	49′4″	51′0″	53′2″	55′6″	57′10″	60′0″	61′10″	63′4″	64′9″	66′0″
		3	46′4″	48′10″	51′4″	53′10″	56′0″	58′8″	61′0″	63′0″	64′6″	66′0″
		4	44′8″	46′6″	49′0″	51′6″	54′0″	57′0″	59′8″	62′0″	64′2″	66′0″
	9′6″	1	32′0″	32′8″	34′0″	35′0″	36′10″	38′10″	41′6″	43′8″	46′0″	48′0″
		2	49′2″	50′6″	51′10″	53′6″	55′4″	58′0″	60′6″	62′8″	64′6″	65′11″
		3	47′0″	48′2″	49′10″	51′6″	53′11″	57′0″	59′8″	62′0″	64′3″	65′11″
		4	44′8″	45′10″	47′6″	49′10″	52′6″	55′9″	58′9″	61′6″	63′10″	65′11″

Parking: Recommended Module Widths (Part 2)

Group III: large cars	9′0″	1	32′7″	33′0″	34′0″	35′11″	38′3″	40′11″	43′6″	45′5″	46′9″	48′0″
		2	50′2″	51′2″	53′3″	55′4″	58′0″	60′4″	62′9″	64′3″	65′5″	66′0″
		3	47′9″	49′1″	52′3″	53′8″	56′2″	59′2″	61′11″	63′9″	65′2″	66′0″
		4	45′5″	46′11″	49′0″	51′8″	54′9″	58′0″	61′0″	63′2″	64′10″	66′0″
	9′6″	1	32′4″	32′8″	33′10″	34′11″	37′2″	39′11″	42′5″	45′0″	46′6″	48′0″
		2	49′11″	50′11″	52′2″	54′0″	56′6″	59′3″	61′9″	63′4″	64′8″	66′0″
		3	47′7″	48′9″	50′2″	52′4″	55′1″	58′4″	60′11″	62′10″	64′6″	66′0″
		4	45′3″	46′8″	48′5″	50′8″	53′8″	57′0″	59′10″	52′2″	64′1″	66′0″
	10′0″	1	32′4″	32′8″	33′10″	34′11″	37′2″	39′11″	42′5″	45′0″	46′6″	48′0″
		2	49′11″	50′11″	52′2″	54′0″	56′6″	59′3″	61′9″	63′4″	64′8″	66′0″
		3	57′7″	48′9″	50′2″	52′4″	55′1″	58′4″	60′11″	62′11″	64′6″	66′0″
		4	45′3″	46′8″	48′5″	50′8″	53′8″	57′0″	59′10″	62′2″	64′1″	66′0″

Parking - Example

Example 1: A new facility is set to have **200 employees**. Similar facilities were surveyed, and it was found that one parking space must be provided for **every 2 employees**. Additionally, **40%** of all automobiles driven to work are compact and **5%** of the spaces should be accessible spaces. The available parking lot space is **180** feet wide and **200** feet deep. Assuming no walls and no walking edge, determine the best parking layout using a stall width **(SW) of 8.6'** for standard automobiles.

Parking - Example

Step 1: Determine the **number** of automobiles to be parked by the **type** of automobile.

If the new facility were to have a similar proportion of spaces as similar facilities, then we would need 200/2=**100 parking spaces.** We also assume that **40%** of the automobiles will park in the compact spaces according to our survey. However, not every compact automobile will decide to park in a compact parking space. So, being conservative, we can estimate that **30** of the 100 parking spaces should be compact.

Parking - Example

Step 2: Determine the **space** required for each **type** of automobile.

Since we do not have walls, we will use the **W4** parking configuration. We will begin the layout by selecting the **90°** double-loaded two-way traffic because of its efficient use of space. Then we will determine if the available lot is adequate.

			θ Angle of Park									
	SW	W	45°	50°	55°	60°	65°	70°	75°	80°	85°	90°
Group I: small cars	8′0″	1	25′9″	26′6″	27′2″	29′4″	31′9″	34′0″	36′2″	38′2″	40′0″	41′9″
		2	40′10″	42′0″	43′1″	45′8″	48′2″	50′6″	52′7″	54′4″	55′11″	57′2″
		3	38′9″	40′2″	41′5″	44′2″	47′0″	49′6″	51′10″	53′10″	55′8″	57′2″
		4	36′8″	38′3″	39′9″	42′9″	45′9″	48′6″	51′1″	53′4″	55′5″	57′2″
Group II: standard cars	8′6″	1	32′0″	32′11″	34′2″	36′2″	38′5″	41′0″	43′6″	45′6″	46′11″	48′0″
		2	49′10″	51′9″	53′10″	56′0″	58′4″	60′2″	62′0″	63′6″	64′9″	66′0″
		3	47′8″	49′4″	51′6″	54′0″	56′6″	59′0″	61′2″	63′0″	64′6″	66′0″
		4	45′3″	46′10″	49′0″	51′8″	54′6″	57′10″	60′0″	62′6″	64′3″	66′0″

Parking - Example

Step 2: Determine the **space** required for each **type** of automobile.

Requirements: 100 parking spaces: 180 feet wide and 200 feet deep.

- 30 compact automobiles @ SW 8'0" (Module Width: 57'2")
- 70 standard automobiles @ SW 8'6" (Module Width: 66'0")

Check if the depth of the lot (200 feet) can accommodate a parking layout of 2 modules for standard automobiles and one module for compact automobiles.

One dimension/side: 2(66')+1(57'2") = **189.17** feet **< 200** feet (depth) ✓

Parking - Example

Step 2: Determine the **space** required for each **type** of automobile.

Now we are left to make sure that all spaces fit within the 180 feet requirement limit.

Because our parking angle, θ, is 90°, our PW=SW. Otherwise, we would need to calculate the PW based on the parking angle.

Compact automobiles: (180'/8')x2 = **45 > 30** compact automobiles. ✓
Standard automobiles: (180'/8.5')x2x2 = **84.7 > 70** standard automobiles. ✓

Parking - Example

Step 3: Determine the **available space** for parking.

This leaves us with a possible layout of 2 rows/module x 2 standard modules & 2 rows/module x 1 compact module.

Now we only need to accommodate for accessible spaces. For this example, we will account for **five (5%)** accessible spaces, which is closely in line with ADAAG 4.1.2.

If we recall our recommended width for a handicap parking space is around **12'**, so we will use this to calculate the new size requirement.

Parking - Example

Step 3: Determine the **available space** for parking.

Assuming rows #1-4 (first 2 modules) include all standard vehicles and rows #5-6 (final module) includes all compact automobiles.

If we assign row #1 to occupy all accessible spaces, that will require 5x12'=**60'** of space reserved for accessibility.

The remaining spaces in row #1 will serve standard automobiles, therefore the maximum number of automobiles we can fit is (180'-60')/8.5' = 14.11 or **14** standard automobiles.

Parking - Example

Step 3: Determine the **available space** for parking.

This leaves 70-14-5(accessible)=51 standard automobile parking spaces.

Adjusting for automobile circulation (say 2x14' lanes) around these rows, we are left with (180'-2x14')/8.5'=17.9 or **17** maximum standard parking spaces for rows #2-4.

Row #5 will also need to account for circulation (so that vehicles can reach row #6), resulting in a possible total (180'-2x14')/8'=19 compact parking spaces. Allowing for some additional tolerance we can bring this down to **18** maximum parking spaces for row #5.

Parking - Example

Step 3: Determine the **available space** for parking.

Row #6 allows for a maximum of 180'/8'=22.5 or **22** maximum compact parking spaces. Hence, rows #5 & #6 account for a total of 40 compact parking spaces. This leaves up to 110 parking spaces available. The distribution of automobiles will thus look like:

Row	Compact	Standard	Handicap
#1		14	5
#2		17	
#3		17	
#4		17	
#5	18		
#6	22		
Total	40	65	5

Parking - Example

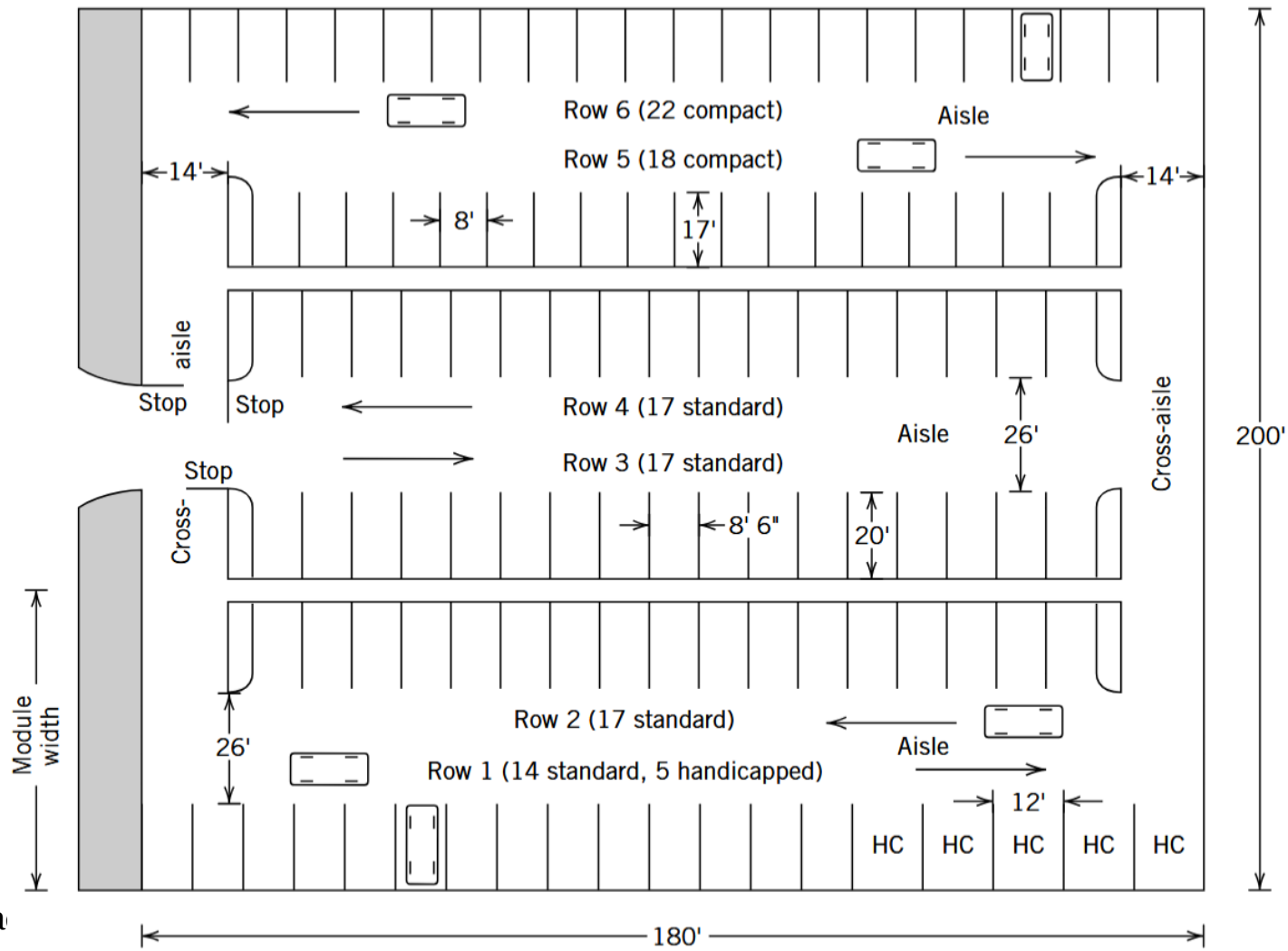

Parking - Example

Example 2: Same premise as before. *A new facility is set to have **200 employees**. Similar facilities were surveyed, and it was found that one parking space must be provided for **every 2 employees**. Additionally, **40%** of all automobiles driven to work are **compact** and **5%** of the spaces should be **accessible spaces**. The available parking lot space is **180** feet wide and **200** feet deep. Assuming no walls and no walking edge, determine the best parking layout using a stall width **(SW) of 8.6'** for standard automobiles.*

However, this time we will assume a stall depth (SD) of **16'** and a parking angle, θ, of **60°.**

Parking - Example

Step 2: Determine the **space** required for each **type** of automobile.

Since we do not have walls, we will use the **W4** parking configuration. We will be selecting the **60° parking angle**, given the example requirements.

			θ Angle of Park									
	SW	W	45°	50°	55°	60°	65°	70°	75°	80°	85°	90°
Group I: small cars	8′0″	1	25′9″	26′6″	27′2″	29′4″	31′9″	34′0″	36′2″	38′2″	40′0″	41′9″
		2	40′10″	42′0″	43′1″	45′8″	48′2″	50′6″	52′7″	54′4″	55′11″	57′2″
		3	38′9″	40′2″	41′5″	44′2″	47′0″	49′6″	51′10″	53′10″	55′8″	57′2″
		4	36′8″	38′3″	39′9″	42′9″	45′9″	48′6″	51′1″	53′4″	55′5″	57′2″
Group II: standard cars	8′6″	1	32′0″	32′11″	34′2″	36′2″	38′5″	41′0″	43′6″	45′6″	46′11″	48′0″
		2	49′10″	51′9″	53′10″	56′0″	58′4″	60′2″	62′0″	63′6″	64′9″	66′0″
		3	47′8″	49′4″	51′6″	54′0″	56′6″	59′0″	61′2″	63′0″	64′6″	66′0″
		4	45′3″	46′10″	49′0″	51′8″	54′6″	57′10″	60′0″	62′6″	64′3″	66′0″

Parking - Example

Step 2: Determine the **space** required for each **type** of automobile.

Requirements: 100 parking spaces: 180 feet wide and 200 feet deep.

- 30 compact automobiles @ SW 8'0" (Module Width: **42'9"**)
- 70 standard automobiles @ SW 8'6" (Module Width: **51'8"**)

Step 3: Determine the **available space** for parking.

Given our space limit we can have a maximum of 200'- 42.75'xC - 51.67'xS modules (C=1, S=3, totaling **4** W4 modules & 6 rows).

Parking - Example

Step 3: Determine the **available space** for parking.
We need to calculate the number of vehicles per row using PW

Compact:
Parking Width (PW) = SW/sin(θ) = 8'/sin(60°) = **9.2'**
Distance lost (y) = SD x cos(θ) = 16' x cos(60°) = **8'**
Module depth = y+(#spaces x PW) ∴ #spaces = (180'-8')/9.2' = 18.69
or **18 automobiles**

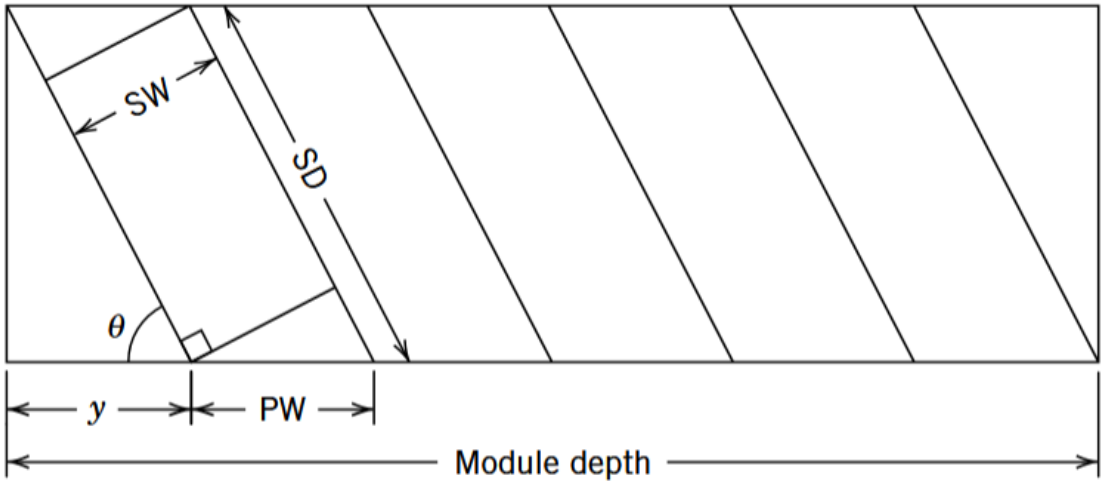

Parking - Example

Step 3: Determine the **available space** for parking.

Standard:

Parking Width (PW) = SW/sin(θ) = 8.5'/sin(60°) = **9.8'**

Distance lost (y) = SD x cos(θ) = 16' x cos(60°) = **8'**

Module depth = y+(#spaces x PW) ∴ #spaces = (180'-8')/9.8' = 17.55 or **17 automobiles**

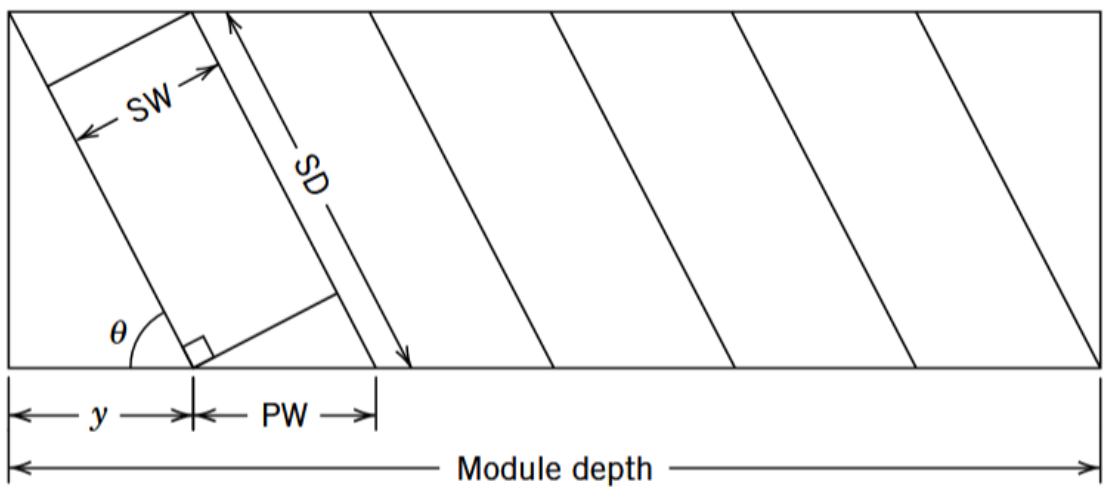

Parking - Example

Step 3: Determine the **available space** for parking.

Estimating the vehicles per module, we are left with:
Compact: 18 x 1 (module) x 2 (rows) = **36** compact parking spaces
Standard: 17 x 3 (modules) x 2 (rows) = **102** standard parking spaces

Adding considerations for **accessible** spaces:
Row #1 (standard w/out circulation) : (180' – y – 5x12')/9.8' = 11.42 or **11** spaces remaining
Rows #2-6 (standard w/ circulation): (180' – y – 2x14')/9.8' = 14.7 or **14** spaces per row
Row #7 (compact w/ circulation): (180'- y – 2x14')/9.2' = 15.65 or **15** spaces
Row #8 (compact w/out circulation): (180'-y)/9.2' = 18.7 or **18** spaces
Total: 5 + 11 + 14x5 + 15+ 18 = **119** spaces (5 accessible, 33 compact, 81 standard)

In-class Activity

A parking lot is to be **400** feet wide and **370** feet deep. How many **standard-sized (8'6")** cars can we fit in this lot if we use a **W2** module configuration at **90°**? For this problem, ignore the requirement for accessible spaces and circulation. Compare both possible arrangements.

			θ Angle of Park									
	SW	W	45°	50°	55°	60°	65°	70°	75°	80°	85°	90°
Group I: small cars	8′0″	1	25′9″	26′6″	27′2″	29′4″	31′9″	34′0″	36′2″	38′2″	40′0″	41′9″
		2	40′10″	42′0″	43′1″	45′8″	48′2″	50′6″	52′7″	54′4″	55′11″	57′2″
		3	38′9″	40′2″	41′5″	44′2″	47′0″	49′6″	51′10″	53′10″	55′8″	57′2″
		4	36′8″	38′3″	39′9″	42′9″	45′9″	48′6″	51′1″	53′4″	55′5″	57′2″
Group II: standard cars	8′6″	1	32′0″	32′11″	34′2″	36′2″	38′5″	41′0″	43′6″	45′6″	46′11″	48′0″
		2	49′10″	51′9″	53′10″	56′0″	58′4″	60′2″	62′0″	63′6″	64′9″	66′0″
		3	47′8″	49′4″	51′6″	54′0″	56′6″	59′0″	61′2″	63′0″	64′6″	66′0″
		4	45′3″	46′10″	49′0″	51′8″	54′6″	57′10″	60′0″	62′6″	64′3″	66′0″

In-class Activity

Answer

1. How many modules?

Option 1:
370'/66' = 5.6 or **5** modules
Option 2:
400'/66' = 6.1 or **6** modules

In-class Activity

Answer

2. How many cars can we park per module?

Option 1:
400'/8.5' = 47 cars/row x 2 rows = **94** cars
Option 2:
370'/8.5' = 43 cars/row x 2 rows = **86** cars

In-class Activity

Answer

3. How many total cars?

Option 1:
94 cars x 5 modules = **470** cars
Option 2:
86 cars x 6 modules = **516** cars

In this case, option 2 is more space efficient.

Restrooms

A restroom should be located within **200 feet** of every permanent **workstation**.

Decentralized restrooms provide greater employee convenience than large, centralized restrooms.

Restrooms should be accessible to people with disabilities (PWD) while complying with local zoning regulations.

Restrooms

When designing a restroom, we should consider:

- The number of **toilets** and space required
- The number of **sinks** and space required
- In the case of male restrooms, urinal requirements
- **Accessibility** for PWD
- **Aisle widths**

Restrooms

Recommendations for the minimum number of toilets (water closets) and sinks (lavatories) is provided below.

Business, Mercantile, Industrial Other Than Foundry and Storage			
Water Closets	Employees	Lavatories	Employees
1	1–15	1	1–20
2	16–35	2	21–40
3	36–55	3	41–60
4	56–80	4	61–80
5	81–110	5	81–100
6	111–150	6	101–125
7	151–190	7	126–150
		8	151–175
One additional water closet for each 40 employees in excess of 190.		One additional lavatory for each 30 employees in excess of 175.	

Restrooms

Layout considerations:

- Doorways should ensure that the interior of the restroom is not visible from the outside when the door is opened.
- For space planning purposes, **12.5' ft^2** (2.5'x5') should be allowed for each toilet. For sinks and urinals, we should allow for **6' ft^2** (3'x2'). The entrance/exit should have a **15'** ft^2 allowance.
- These requirements might vary given local regulations

Restrooms

Layout considerations:

- Aisle recommendations are shown below:

Aisle Layout	Toilet Layout	Aisle Depth	Aisle Width
Fixtures-Wall	Door opens in	≤16'	3'6" to 4'0"
Fixtures-Wall	Door opens in	>16'	4'0" to 6'0"
Fixtures-Wall	Door opens out	≤16'	4'0" to 4'6"
Fixtures-Wall	Door opens out	>16'	4'6" to 6'6"
Fixtures-Fixtures	Door opens in	≤16'	5'6" to 6'0"
Fixtures-Fixtures	Door opens in	>16'	6'0" to 8'0"
Fixtures-Fixtures	Door opens out	≤16'	6'0" to 6'6"
Fixtures-Fixtures	Door opens out	>16'	7'0" to 9'0"

Restrooms - Example

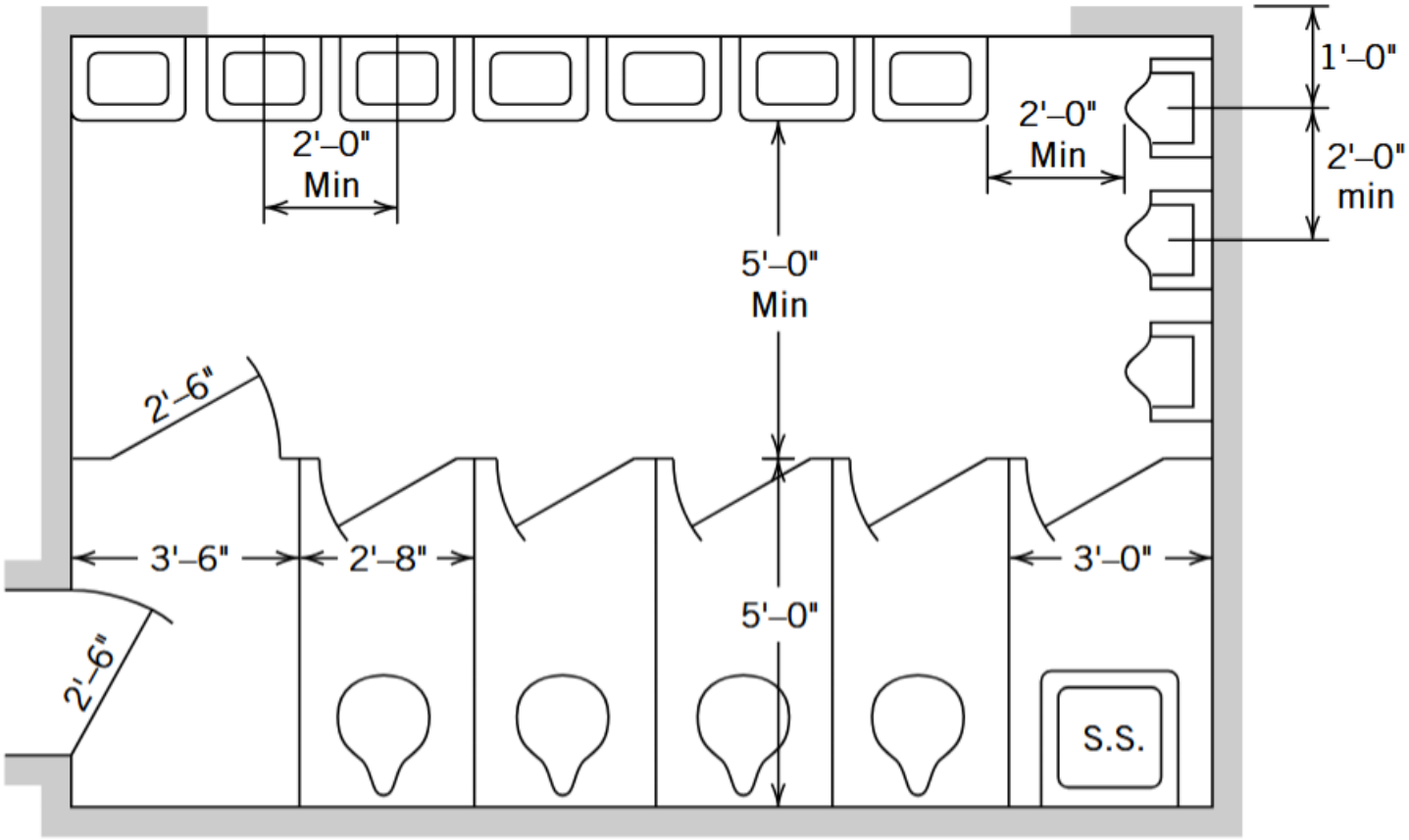

Food Services

Food services are any service provided by the facility for employees to eat during their lunch breaks.

Food services activities can be viewed as a necessity, convenience, or luxury depending on the firm.

Some aspects that might have a significant impact on the planning of food services are:

- Policy on off-premise dining
- Subsidized meal costs
- Time allowed for dining
- Firm's other philosophies/viewpoints

Food Services

Food services may be satisfied by any of the following alternatives:

- Dining away from the facility
  - *Limitations: longer breaks, worker interactions.*
- Vending machines & cafeteria
- Serving line & cafeteria
- Full kitchen & cafeteria

Food Services

Food services should be planned by considering the number of employees who eat in the facility during peak activity time.

For any alternative that includes a cafeteria we should consider:

- Functional planning
- Ease of cleaning
- Aesthetic factors

*Note: Cafeterias refer to the dining area (including tables, chairs, trash cans, etc.) where employees will be eating.

Food Services

Some consideration for deciding between a food service alternative:

- **Vending machines** are the **easiest** option to plan for, as they take the least amount of space and require minimal considerations. Just $1ft^2$ should be allowed per person based on the maximum number of people eating at one time.
- **Serving lines** should be considered when a facility employs **at least 200 people**. These offer the benefits of a full kitchen at a competitive cost while requiring less management.
- **Full kitchens** become economically beneficial when there are **at least 400 employees** in the facility. However, more management is required, planning for food preparation, storage, dishwashing, etc.

Food Services

When a viewpoint is adopted of having on-site food services, the food service should be located within the facility using the following guidelines:

- Within **1000 feet of all permanent employee workstations.**
- Centrally located and positioned so that the distance from the **furthest workstation** is **minimized**.
- Allow delivery of food and trash pickup.
- Allow employees an **outside view** while eating.
- Adequate **ventilation**, so that odors and exhaust do not interfere with other facility activities.

Food Services

It is expected that the **first third** of meal breaks will be the time required for employees to **prepare** to eat and obtain their meal.

So, when eating in shifts, we can expect that only **2/3rds of the time will be spent eating.**

Taking these considerations, an example of lunch shifts can be seen below:

Beginning of Lunch Break	Time Sat Down in Chair	End of Lunch Break
11:30 A.M.	11:40 A.M.	12:00 Noon
11:50 A.M.	12:00 Noon	12:20 P.M.
12:10 P.M.	12:20 P.M.	12:40 P.M.
12:30 P.M.	12:40 P.M.	1:00 P.M.

Health Services

Health services required within a facility are dependent on local building codes.

The types of health services that may be required within a facility include:

- First-aid treatment
- Pre-employment examinations
- Dental care
- Treatment of illnesses
- Major medical treatment

Health Services

At the very least, a small first-aid room should be housed in the facility.

The minimum requirements for a first-aid room include:

- An approved first-aid kit
- A bed
- Two chairs
- At least 100ft^2

Health services should be located close to the most hazardous tasks.

Barrier-Free Compliance

A barrier is a physical object that impedes a PWD access to the use of a facility.

- *Ex. A door that is not wide enough or stairs without ramp access to the facility.*

The facility planner must integrate barrier-free designs in addressing the personnel requirements for a facility.

Must comply with the Americans with Disabilities Act (ADA) guidelines.

Need to consider designs that work across different groups.

Barrier-Free Compliance

Comfortable reaching ranges are shown in grey.

These are typically between 3-4' ft above floor level.

The upper limit is the height at which a PWD can easily reach an object, while the lower limit is the height by which an able-bodied person can reach an object without bending.

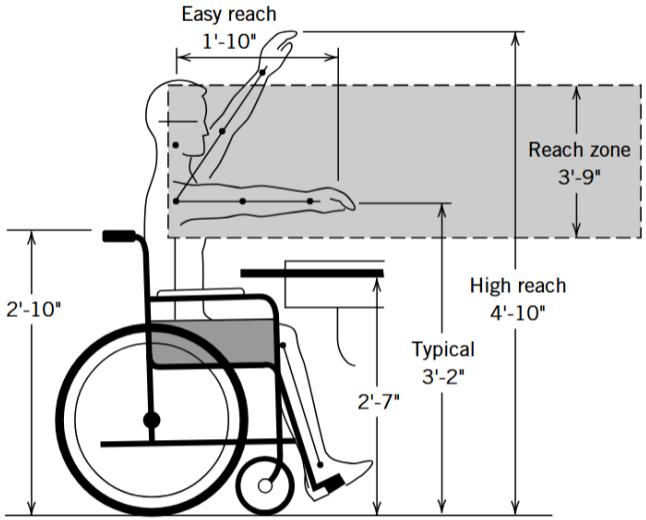

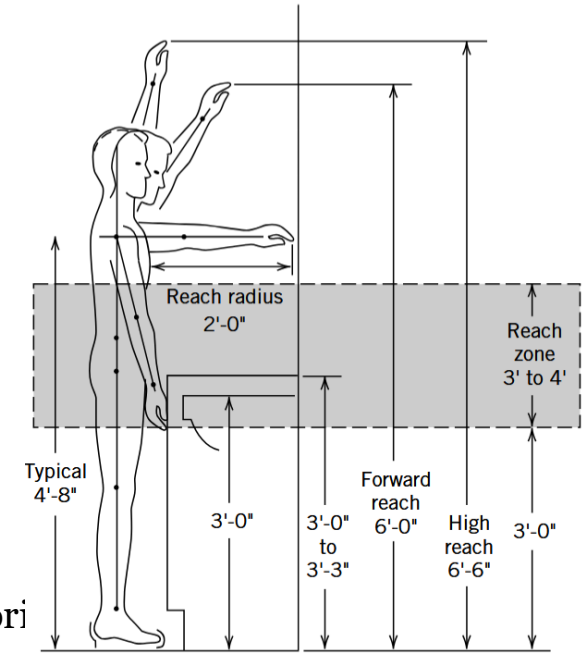

Barrier-Free Compliance

Other considerations include:

- PWD typically require increased clearance, usually ranging from 2'3" to 2'5".
- Aisle widths should account for turning diameters, which are typically 5'3".

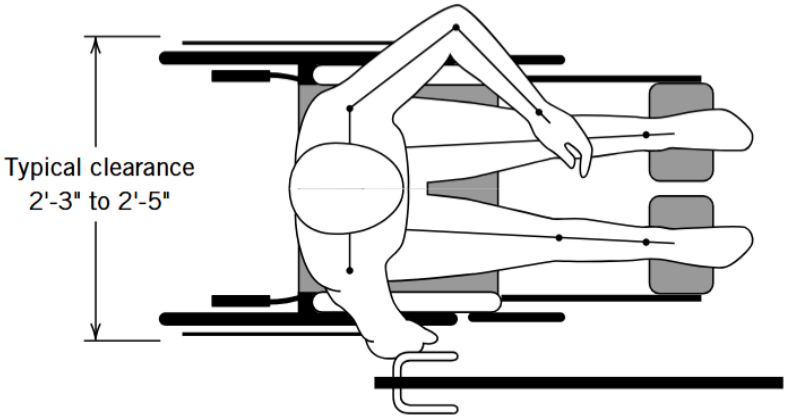

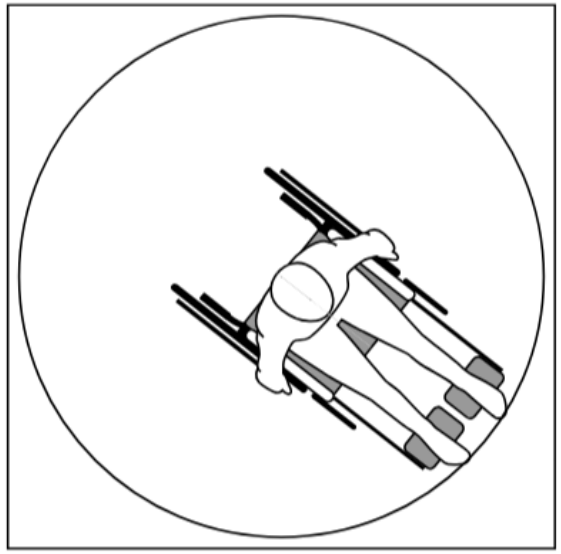

Office Spaces

Office facility planning is the office space that will be provided to the administrative employees.

The starting point for planning office facilities is the collection of data concerning the **objectives** of the facility and the **activities** to be performed to accomplish these objectives.

With this data we will determine **departmental interrelationships** and departmental **area** requirements.

Employee interviews and **input** should also be considered in this process.

Office Spaces - Types

Closed offices

- Floor-to-ceiling walls (either temporary or permanent)

Open offices

- Space is open
- No floor-to-ceiling walls

Activity-based Work Design

- Different types of office settings for different activities
- Often found in offices that use agile work processes
- Workers choose the right workstations for their current task

Office Spaces - Types

Open-space offices

Pros	Cons
Improved communication	Lack of privacy
Flexibility in office operations	Lack of status recognition
Better access to common files and equipment	Relatively noisy
Better illumination, heating, cooling, and ventilation	Easy access for interruptions and interferences
Lower maintenance costs	
Space flexibility (reduced space requirements)	

Office Spaces - Types

Activity-based: Video explanation

Pros	Cons
Knowledge workers take on multiple roles and require different tools	Loss of identity (no personalization, status)
More flexibility	Preferences can outweigh productivity
Saves on costs	Hotdesking can have negative effects on productivity and morale

In-class Activity

A company has decided to allow its employees **one hour** for their lunch breaks. The lunch breaks **start at 11am** and **end at 2pm**. How many lunch **shifts** can be accommodated?

In-class Activity

Solution

4 shifts!

Shift #	Lunch Start	Lunch Sitdown	Lunch end
1	11:00am	11:20am	12:00pm
2	11:40am	12:00pm	12:40pm
3	12:20pm	12:40pm	1:20pm
4	1:00pm	1:20pm	2:00pm